Parts List			
Item	Qty	Part Number	Material
1	1	2026-02-11-17-56-17-924	Steel

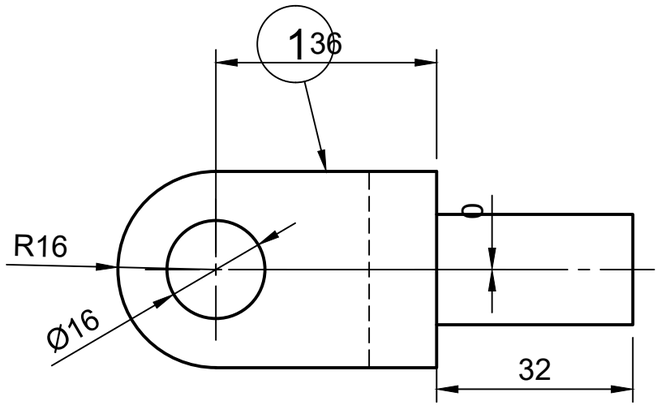

FRONT VIEW

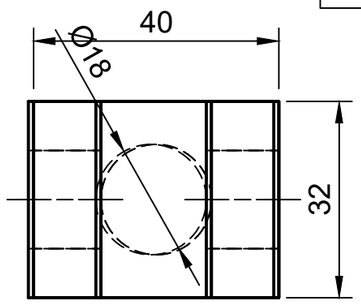

RIGHT VIEW

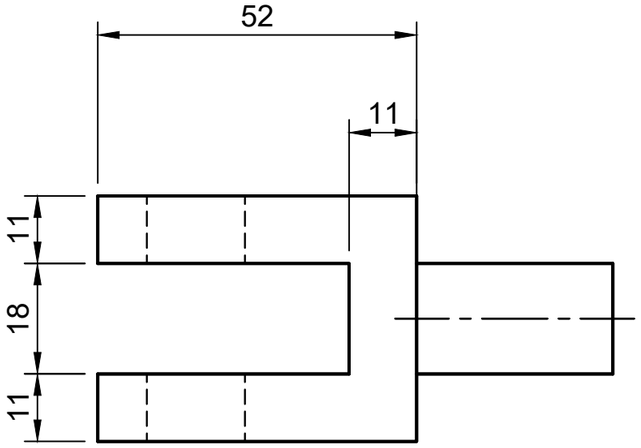

TOP VIEW

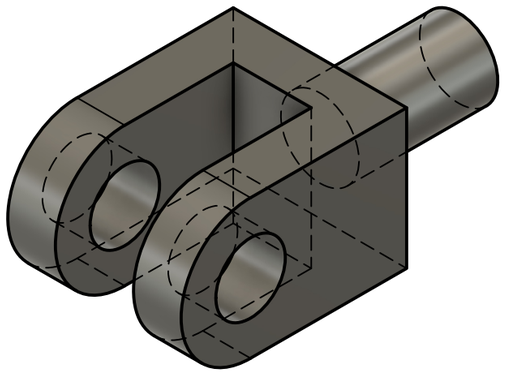

Dept.	Technical reference	Created by	Approved by
CSE	21225040228	MANOSHREE N 11-02-2026	Dr.SARAVANAN M P
		Document type: SKETCH	Document status
		Title: Untitled — CREATE A 3D SOLID MODEL FROM ORTHOGRAPHIC PROJECTION	DWG No.
			Rev: E.N; Date of issue: 5/11; Sheet: 1/1